WWW.DIGITALKHODRO.COM 021 62 99 92 92

Power Door Locks (1)

SD813-1

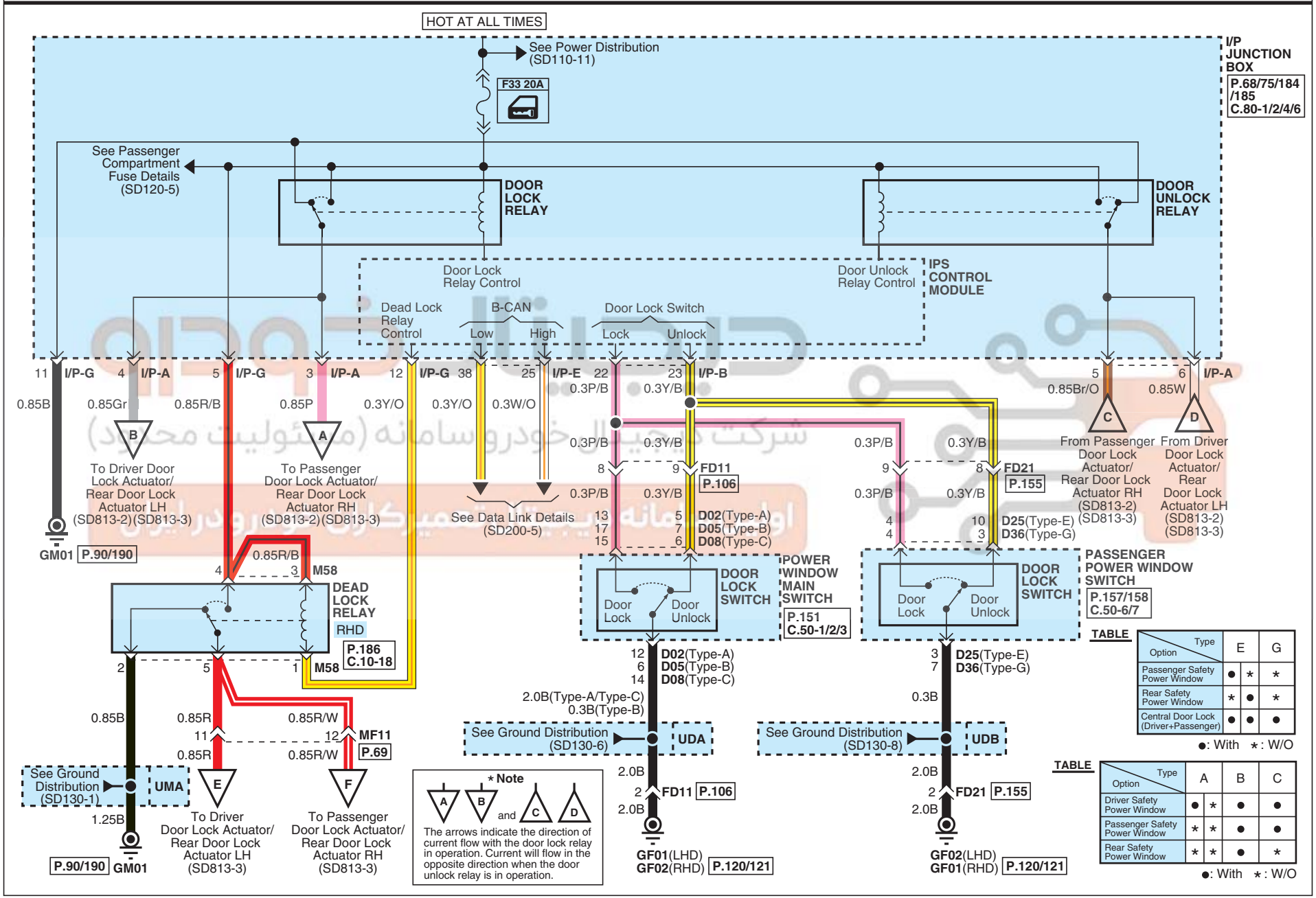

TABLE

Option \ Type	E	G
Passenger Safety Power Window	●	⋆	⋆
Rear Safety Power Window	⋆	●	⋆
Central Door Lock (Driver+Passenger)	●	●	●

●: With ⋆: W/O

TABLE

Option \ Type	A	B	C
Driver Safety Power Window	●	⋆	●	●
Passenger Safety Power Window	⋆	⋆	●	●
Rear Safety Power Window	⋆	⋆	●	⋆

●: With ⋆: W/O

WWW.DIGITALKHODRO.COM 021 62 99 92 92

WWW.DIGITALKHODRO.COM 021 62 99 92 92

Power Door Locks (2)

SD813-2

W/O DEAD LOCK

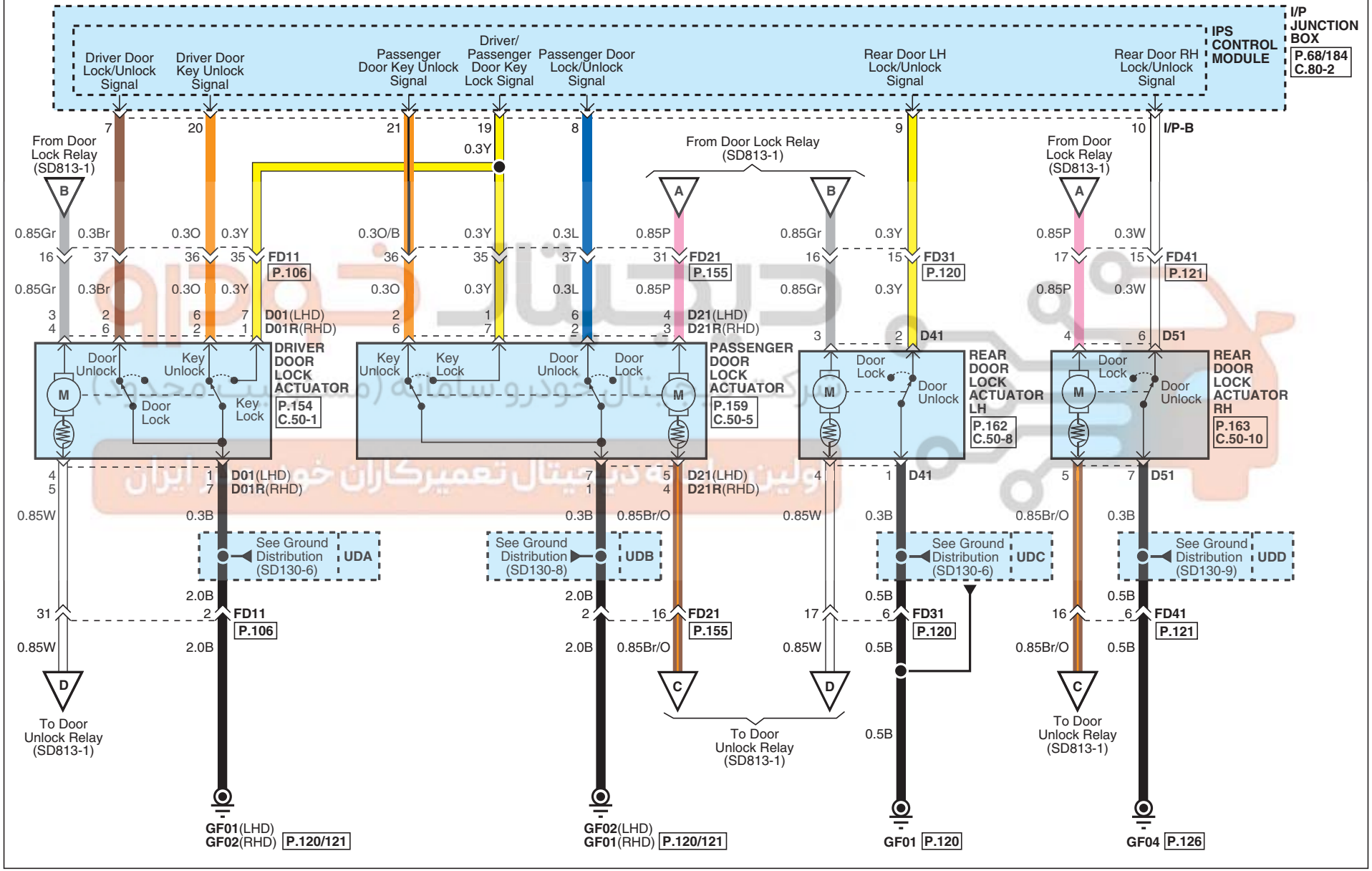

WWW.DIGITALKHODRO.COM 021 62 99 92 92