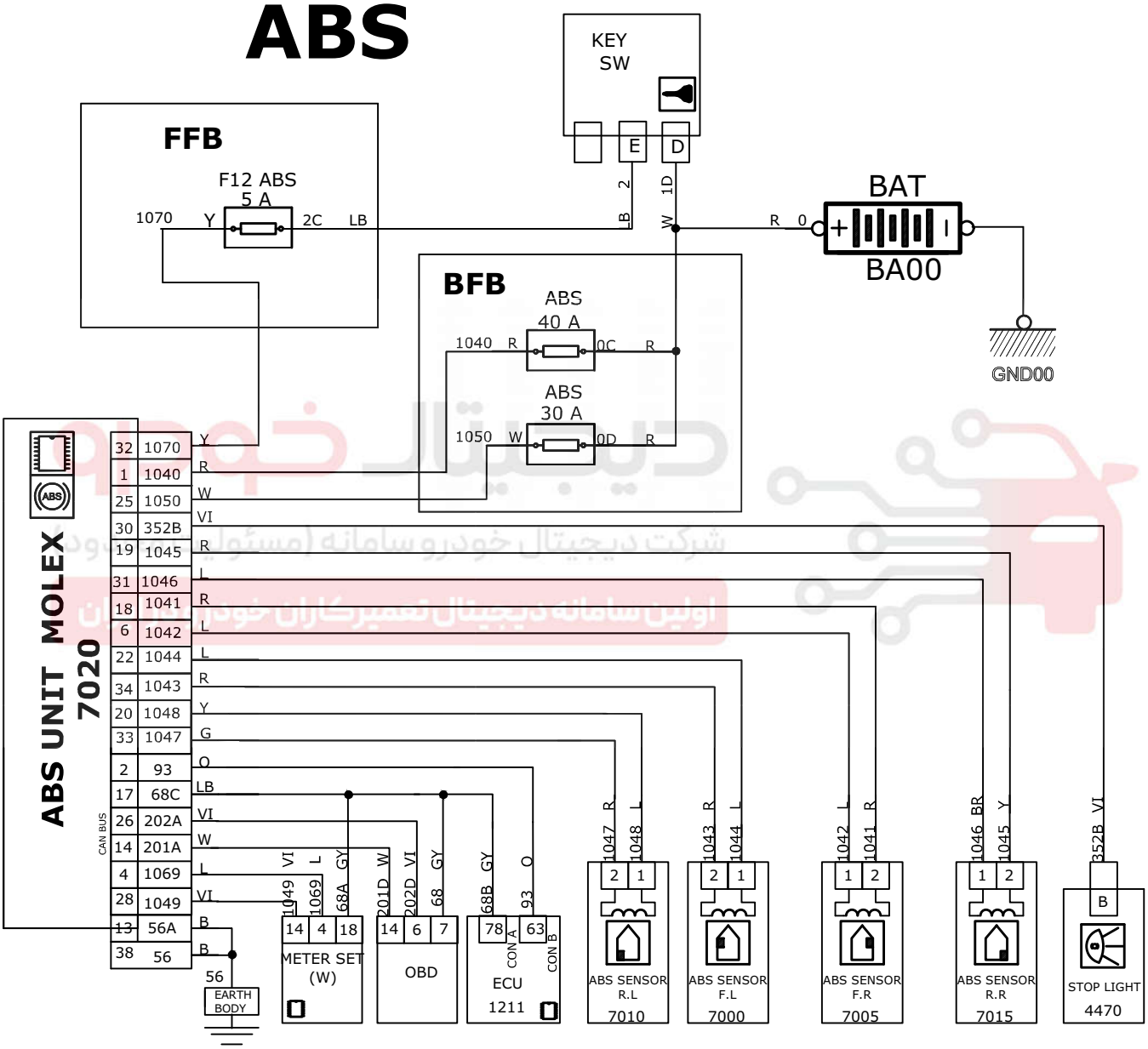SAINA CNG ABS