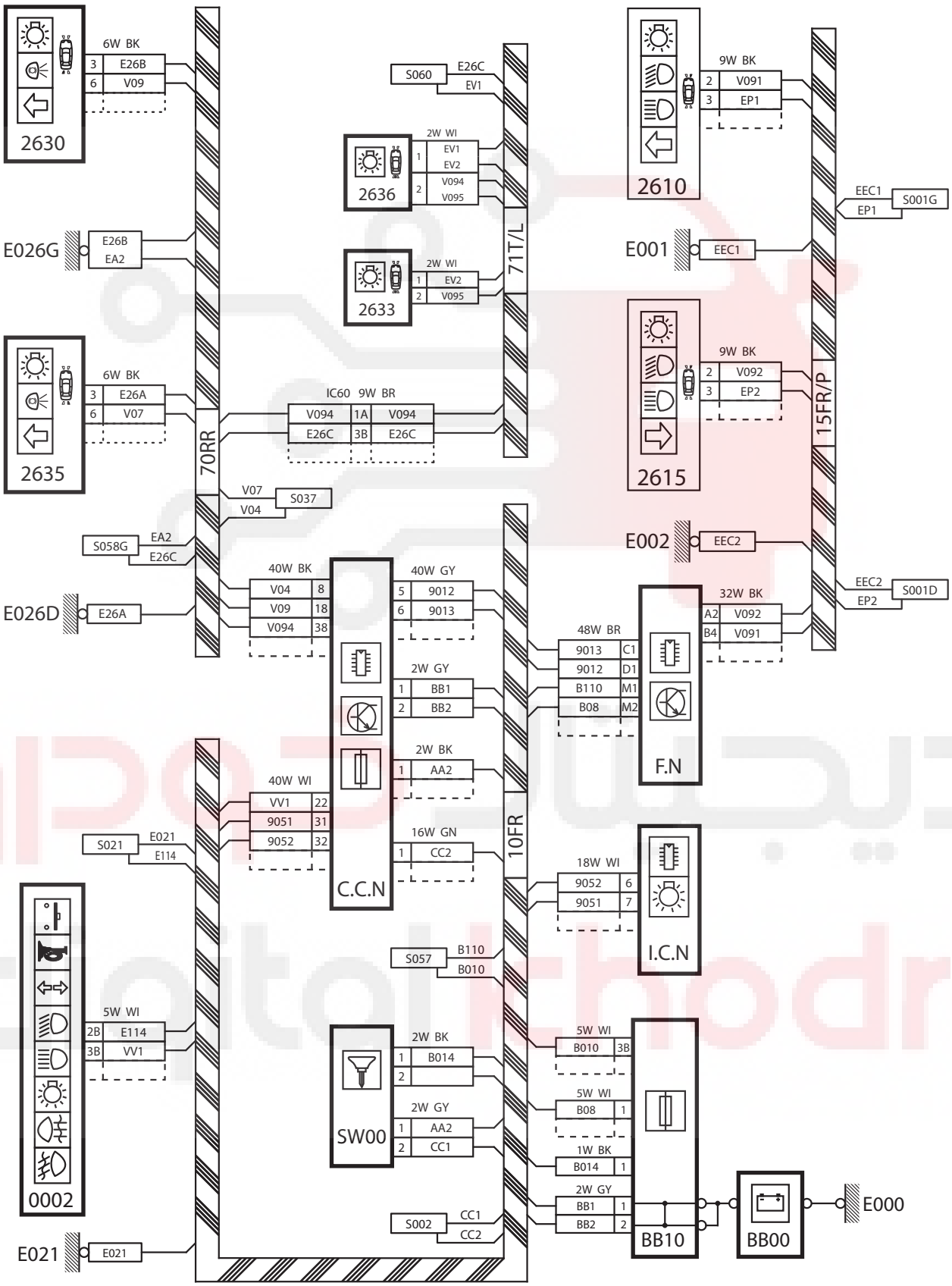MUX-ELE-WIR-00??-01	Front And Rear Fog Lamps